# Glim

rev. 24-04-2024

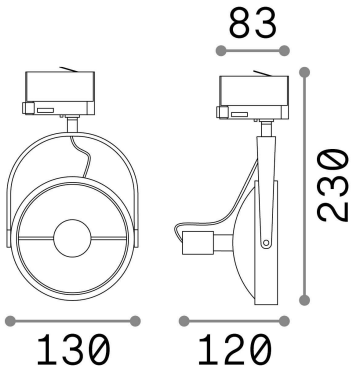


## General info

**Technical - Spotlights and Tracks**

| | |
|---|---|
| **Ean** | 8021696229683 |
| **Item** | GLIM TRACK NERO |
| **Installation** | Spotlights and Tracks |
| **Guarantee** | 5 years |
| **Gross weight** | 0.79 kg |
| **Volume** | 0.018 $m^3$ |

## Technical info

| | |
|---|---|
| **Net weight** | 0.32 kg |
| **Insulation class** | II |
| **Protection index** | IP20 |
| **Compliance** | CE |
| **Operating temperature** | 0° ~ +40 °C |
| **Dimmer** | Determined by the light bulb |
| **Power output** | 120-240 V AC |
| **Power supply** | Not required |
| **Adjustability** | YES |

## Source info

| | |
|---|---|
| **Integrated source** | Light bulb (included) |
| **Repleaceable source** | Replaceable |
| **Power** | GU10 max 1 x 50 W |
| **Emission** | Direct |
| **Max consuption** | - |
| **Bulb included** | 1 - E14 OLIVA 4W 3000K CRI80 SATIN |

**IDEAL LUX s.r.l.**
Via Taglio Destro, 32, 30035 Mirano (Venezia)
**Tel** +39 041 5790500 | **Fax** +39 041 8872349 | **E-mail** info@ideal-lux.com
www.ideal-lux.com