Slot

rev. 22-08-2024

General info

Technical - Systems

Ean	8021696267456
Item	SLOT ANG QUADRO D16xD18 3000 mm AL
Installation	Systems
Warranty	5 years
Gross weight	0.45 kg
Volume	0.002931 m³

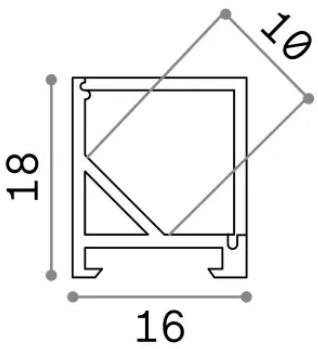

Technical info

Net weight	0.45 kg
Compliance	-
Accessory type	-

IDEAL LUX s.r.l.
Via Taglio Destro, 32, 30035 Mirano (Venezia)
Tel +39 041 5790500 | **Fax** +39 041 8872349 | **E-mail** info@ideal-lux.com
www.ideal-lux.com